Busbar Trunking Assembly

200A-6300A : 1000V

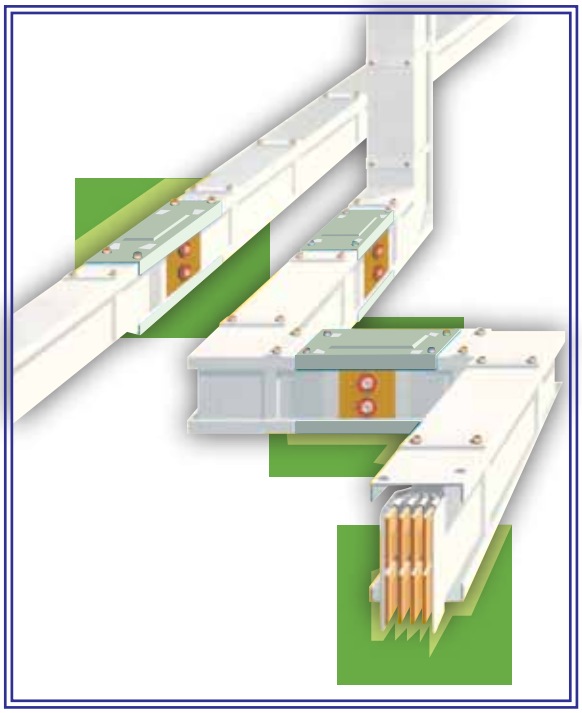

Horizontal and Vertical applications

Suitable for Reliable Power Distribution to:

> industry
> highrise buildings
  – transformer to switchboards
  – switchboards to loads upto 6300A, 1000V

BTA busway meets all low-voltage electrical distribution needs.

Medium Power Transmission
High Power Transmission
and Distribution

Compact, with a casing which favours thermal exchanges, characterized by its low impedance and voltage drop, BTA trunking is particularly suited to long runs. Its aesthetic styling enables it to be fully integrated into industrial and commercial buildings, sports facilities and many other premises of modern design.

BTA Trunking allows :

Transmission of electrical power by way of horizontal or vertical installations in the industrial and tertiary sectors and residential buildings, in which IP 52/54 minimum degree of protection is required.

- Transformer-panel, panel-panel, generator or any other type of power link.
- High power distribution through a range of 25 to 1250 A tap-off boxes.
- Distribution in risers for office or residential multistory buildings.

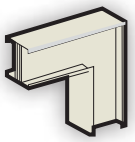

General Features

This trunking is of compact design and incorporates fully anchored busbars. The prelacquered steel plate casing favours thermal exchange. It is low-impedance trunking allowing power transmission over long distances.

BTA copper or aluminium conductors are insulated throughout their length by Class B (130 °C) polyester films.

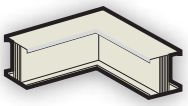

Aluminium conductors comprise a bi-metal section at junctions and tap-offs.

As a result of its anchored busbar design (there is no gap between busbar and casing) a fire barrier element is not required. BTA trunking can be installed vertically, horizontally, flatwise or edgewise without downgrading its strength.

High Power Transmission and Distribution
800 - 5000A

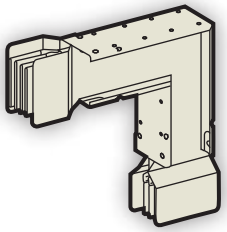

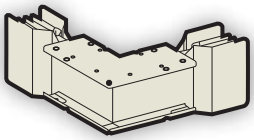

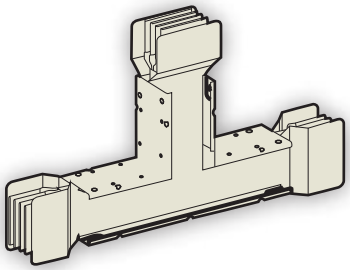

The Technology :

BTA trunking complies with the IEC 60 439.2 Standard
Degree of protection is IP 52 or IP 54.
Number of live conductors = 3 or 4.
Rated voltage = 1000 V.
Ratings available from : 1000 to 5000 A, with copper conductors,
800 to 4000 A, with aluminium conductors.

The fully enclosed casing comprises four 16/10 gauge prelacquered galvanized/phopshatized sheet steel sections (RAL 7032/35 colour).

The straight units are 1, 2 or 3 metres long and incorporate 3P + PE or 3P + N + PE conduction configurations.

The casing comprises the protective earth conductor, electrical continuity is reliably ensured at the junctions.

Optionally, BTA units can be provided with a specific protective earth conductor located inside the casing.

Electrical connection between units is provided by a "junction block" tightened by one to four prevailing nuts, which simultaneously ensures splicing of the live conductors as well as of the protective earth conductor.

Possible maintenance operations are undertaken using a torque spanner

(tightening torque = 6 daN m).

Mechanical connection between two units is provided by two junction covers assembled using eight captive screws.

Various accessories are offered for feeding, covering the ends and changing the direction of the trunking.

Two types of trunking

- BTA trunking without tap-off windows providing power transmission links.
- BTA trunking with tap-off windows which can receive the following tap-off boxes :
  - o 25 to 400 A plug-in boxes, incorporating spring-clip connectors, which provide frictionally tight tap-offs,
  - o 400 to 1250 A boxes, tightened using a prevailing torque bolt, which provide mechanically fixed tap-offs; these boxes can only be connected/disconnected when power is off.

Remark

Copper conductors are recommended for cases involving severe usage of BTA trunking with tap-off windows and plug-in tap-off boxes (e.g. welding plant supply systems).

High Power Transmission and Distribution

Electrical Characteristics
Copper Conductors 1000 to 5000A

Ratings	Copper conductors			h1 Conductor	h2 Junction block	Dimensions
1000 A	1 busbar	70 x 6	412°	74	104	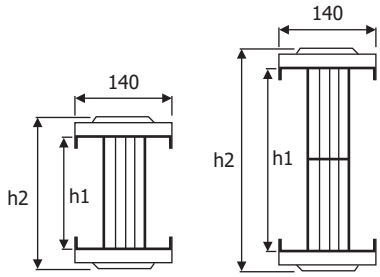
1350 A	1 busbar	100 x 6	592°	104	134	
1600 A	1 busbar	120 x 6	712°	124	154	
2000 A	1 busbar	160 x 6	952°	164	194	
2500 A	1busbar	200 x 6	1192°	204	234	
3000 A	2 busbars	120 x 6	1424°	244	274	
4000 A	2 busbars	160 x 6	1904°	324	354	
5000 A	2 busbars	200 x 6	2384°	404	434	

		h74	h104	h124	h164	h204	h244	h324	h404
Rated current (Iz) in amps		**1000A**	**1350A**	**1600A**	**2000A**	**2500A**	**3000A**	**4000A**	**5000A**
Rated insulation voltage		1000							
Number of live conductors		3 or 4							
Degree of protection (EN 60 529)		Standard IP 52, factory installed additions for IP 54.							
Cross-sectional area (S) of conductors /mm^2		412	592	712	952	1192	1424	1904	2384
Cross-sectional area (S) of neutral /mm^2		412	592	712	952	1192	1424	1904	2384
R per phase in mΩ/m at 20 ºC		0,042	0,03	0,025	0,019	0,015	0,0125	0,0094	0,0075
R per phase in mΩ/m at I th		0,056	0,036	0,03	0,023	0,018	0,015	0,011	0,009
Lw per phase in mΩ/m		0,022	0,016	0,015	0,013	0,01	0,008	0,0074	0,007
Impedance per phase in mW/m at I th		0,06	0,04	0,034	0,026	0,02	0,017	0,013	0,011
Short circuit withstand capacity in kA.	I peak current	87	109	138	157	180	200	201	210
	I RMS for 1 s.	42	52	62	73	80	90	94,8	95
S pe casing (Cu equivalent) /mm:		120	130	140	155	165	180	190	200
S pe extra cond. (Cu equivalent) /mm^2		210	300	360	480	600	720	960	1200
Voltage drop of 3 phase 50 Hz supply in mV per metre and per amp, under evenly distributed load. For a load concentrated at the end of the line, multiply the tabulated values by 2.	Cos.φ= 0,7	0,048	0,032	0,0275	0,022	0,017	0,0139	0,0112	0,0098
	Cos.φ= 0,8	0,051	0,033	0,0286	0,023	0,0177	0,0145	0,0115	0,0099
	Cos.φ= 0.9	0,052	0,034	0,0290	0,023	0,0178	0,0147	0,0114	0,0097
	Cos.φ= 1	0,048	0,031	0,0260	0,02	0,0156	0,013	0,0095	0,0078
Average weight in Kg/m.	3 P + N	29	35	42	48	57	66	82	99
	3 P	26	32	36	40	47	53	65	78

Determination of the relevant usage coefficient K in relation to ambient temperature

Maximum ambient temperature	40°	45°	50°	55°
Average ambient temp. over 24 h.	35°	40°	45°	50°
Usage coefficient K	1	0,95	0,90	0,84

When the ambient temperature differs from the reference temperature, multiply the rating by coefficient K.

High Power Transmission and Distribution

Electrical Characteristics
Aluminium Conductors
800 to 5000A

Ratings	Copper conductors			h2 Conductor	h1 Junction block	Dimensions
800 A	1 busbar	70 x 6	412°	74	104	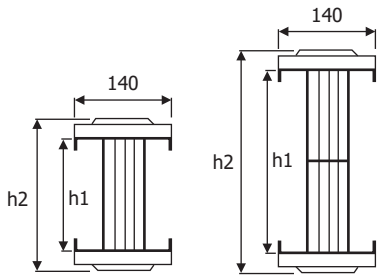
1000 A	1 busbar	100 x 6	592°	104	134	
1200 A	1 busbar	120 x 6	712°	124	154	
1600 A	1 busbar	160 x 6	952°	164	194	
2000 A	1busbar	200 x 6	1192°	204	234	
2500 A	2 busbars	120 x 6	1424°	244	274	
3000 A	2 busbars	160 x 6	1904°	324	354	
4000 A	2 busbars	200 x 6	2384°	404	434	

		h74	h104	h124	h164	h204	h244	h324	h404
Rated current (Iz) in amps		**800A**	**1000A**	**1200A**	**1600A**	**2000A**	**2500A**	**3000A**	**4000A**
Rated insulation voltage		1000							
Number of live conductors		3 or 4							
Degree of protection (EN 60 529)		Standard IP 52, factory installed additions for IP 54.							
Cross-sectional area (S) of conductors /mm^2		412	592	712	952	1192	1424	1904	2384
Cross-sectional area (S) of neutral /mm^2		412	592	712	952	1192	1424	1904	2384
R per phase in mW/m at 20 °C		0,066	0,046	0,038	0,028	0,023	0,019	0,014	0,011
R per phase in mW/m at I th		0,083	0,058	0,048	0,036	0,029	0,026	0,018	0,015
Lw per phase in mW/m		0,022	0,016	0,015	0,013	0,011	0,008	0,0074	0,007
Impedance per phase in mΩ/m at I th		0,086	0,06	0,05	0,038	0,031	0,027	0,019	0,017
Short circuit withstand	I peak current	64	88	108	140	160	182	191	198
capacity in kA.	I RMS for 1 s.	31	43	54	66	70	86	89	90
S pe casing (Cu equivalent) /mm:		120	130	140	155	165	180	190	200
S pe extra cond. (Cu equivalent) /mm^2		210	300	360	480	600	720	960	1200
Voltage drop of 3 phase 50 Hz supply in mV per metre and per amp, under evenly distributed load. For a load concentrated at the end of the line, multiply the tabulated values by 2.	Cos.φ= 0,7	0,064	0,045	0,0383	0,0299	0,0244	0,0206	0,0155	0,0134
	Cos.φ= 0,8	0,069	0,048	0,041	0,0317	0,0258	0,0221	0,0163	0,014
	Cos.φ= 0.9	0,073	0,051	0,043	0,0329	0,0268	0,0232	0,0168	0,0143
	Cos.φ= 1	0,072	0,05	0,0416	0,0312	0,0251	0,0225	0,0156	0,013
Average weight in Kg/m.	3 P + N	20	22	23	25	28	31	37	45
	3 P	19	20	21	23	25	27	32	38

Determination of the relevant usage coefficient K in relation to ambient temperature

Maximum ambient temperature	40°	45°	50°	55°
Average ambient temp. over 24 h.	35°	40°	45°	50°
Usage coefficient K	1	0,95	0,90	0,84

When the ambient temperature differs from the reference temperature, multiply the rating by coefficient K.

Dimensions

junction dimension

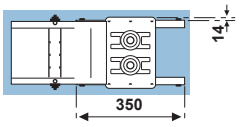

Straight transmission unit

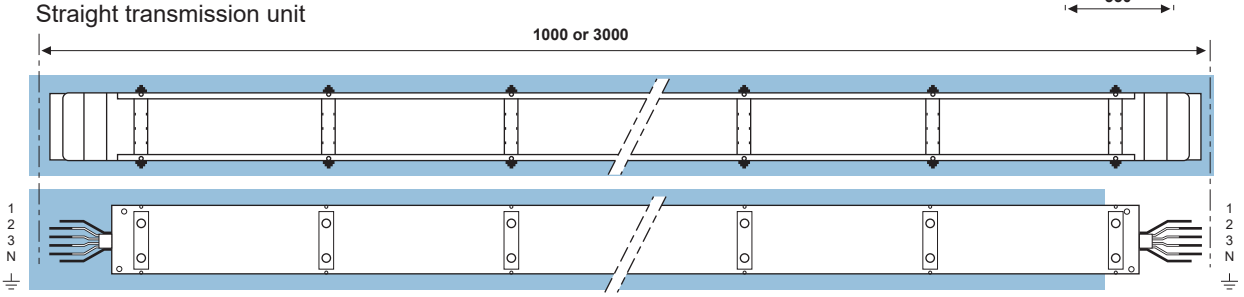

Straight plug-in distribution unit

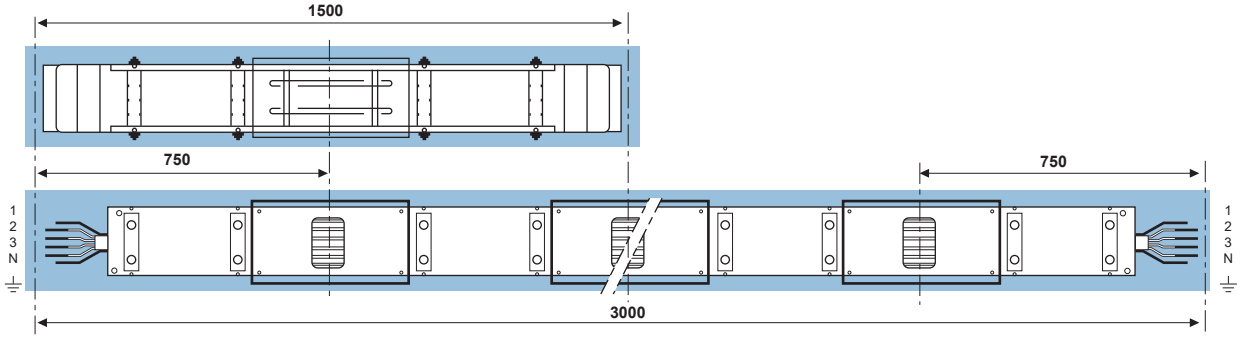

Straight fixed distribution unit

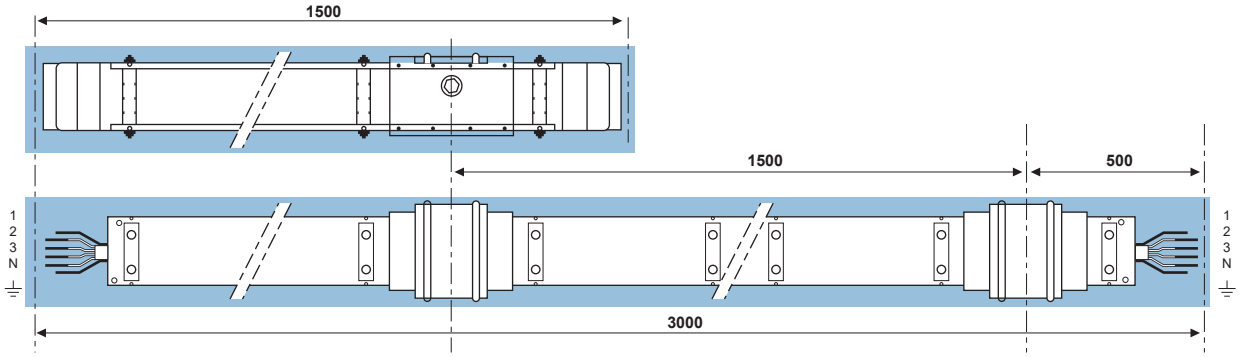

Flange unit

Connection

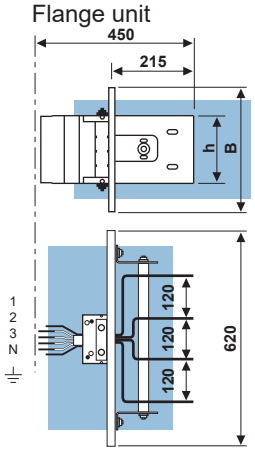

Copper or	1000A	1350A	1600A	2000A	2500A	3000A	4000A	5000A
aluminium	800A	1000A	1200A	1600A	2000A	2500A	3000A	4000A
h	74	104	124	164	204	244	324	404
B	230	230	230	350	350	350	510	510

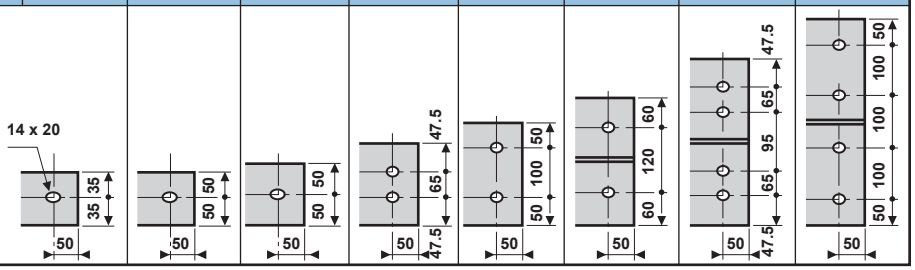

Straight units
Copper and aluminium
Conductors trunking

References BTT or BTD - - 0 RAL 7032/35
BTT or BTD - - 0B with extra earth conductor
BTT or BTD - - 0F for IP 54 unit
BTT or BTD - - 0C for unit fitted with double neutral

			h74	h104	h124	h164	h204	h244	h324	h404
Straight units : Copper			1000A	1350A	1600A	2000A	2500A	3000A	4000A	5000A
Transmission BTT....0	3 P + N + PE	3m	2036-0	2037-0	2031-0	2032-0	2033-0	2034-0	2035-0	2038-0
		1m	2016-0	2017-0	2011-0	2012-0	2013-0	2014-0	2015-0	2018-0
	3 P + PE	3m	1036-0	1037-0	1031-0	1032-0	1033-0	1034-0	1035-0	1038-0
		1m	1016-0	1017-0	1011-0	1012-0	1013-0	1014-0	1015-0	1018-0
Distribution BTD....0	3 P + N + PE	3m	2136-0	2137-0	2131-0	2132-0	2133-0	2134-0	2135-0	2138-0
		2m	2126-0	2127-0	2121-0	2122-0	2123-0	2124-0	2125-0	2128-0
	3P+PE	3m	1136-0	1137-0	1131-0	1132-0	1133-0	1134-0	1135-0	1138-0
		2m	1126-0	1127-0	1121-0	1122-0	1123-0	1124-0	1125-0	1128-0
Distribution fixed tap-off BTO....0	3 P + N + PE	3m	2536-0	2537-0	2531-0	2532-0	2533-0	2534-0	2535-0	2538-0
		2m	2526-0	2527-0	2521-0	2522-0	2523-0	2524-0	2525-0	2528-0
	3 P + PE	3m	1536-0	1537-0	1531-0	1532-0	1533-0	1534-0	1535-0	1538-0
		2m	1526-0	1527-0	1521-0	1522-0	1523-0	1524-0	1525-0	1528-0

			h74	h104	h124	h164	h204	h244	h324	h404
Straight units Aluminium			800A	1000A	1200A	1600A	2000A	2500A	3000A	4000A
Transmission BTT....0	3 P + N + PE	3m	4036-0	4037-0	4035-0	4031-0	4032-0	4033-0	4034-0	4038-0
		1m	4016-0	4017-0	4015-0	4011-0	4012-0	4013-0	4014-0	4018-0
	3 P + PE	3m	3036-0	3037-0	3035-0	3031-0	3032-0	3033-0	3034-0	3038-0
		1m	3016-0	3017-0	3015-0	3011-0	3012-0	3013-0	3014-0	3018-0
Distribution BTD....0	3 P + N + PE	3m	4136-0	4137-0	4135-0	4131-0	4132-0	4133-0	4134-0	4138-0
		2m	4126-0	4127-0	4125-0	4121-0	4122-0	4123-0	4124-0	4128-0
	3 P + PE	3m	3136-0	3137-0	3135-0	3131-0	3132-0	3133-0	3134-0	3138-0
		2m	3126-0	3127-0	3125-0	3121-0	3122-0	3123-0	3124-0	3128-0
Distribution fixed tap-off BTO....0	3 P + N + PE	3m	4536-0	4537-0	4535-0	4531-0	4532-0	4533-0	4534-0	4538-0
		2m	4526-0	4527-0	4525-0	4521-0	4522-0	4523-0	4524-0	4528-0
	3 P + PE	3m	3536-0	3537-0	3535-0	3531-0	3532-0	3533-0	3534-0	3538-0
		2m	3526-0	3527-0	3525-0	3521-0	3522-0	3523-0	3524-0	3528-0

Feed units
Copper/Aluminium Conductors

		h74	h104	h124	h164	h204	h244	h324	h404
For sizes	Copper	1000A	1350A	1600A	2000A	2500A	3000A	4000A	5000A
	or Aluminium	800A	1000A	1200A	1600A	2000A	2500A	3000A	4000A
3 P + N + PE	flange unit		2006-0	2007-0	2001-0 2008-0	2002-0	2003-0	2004-0	2005-0
3 P + PE	flange unit		1006-0	1007-0	1001-0	1002-0	1003-0	1004-0	1005-0

Dimensions

No. 2 flatwise elbow
Outdoor reutral

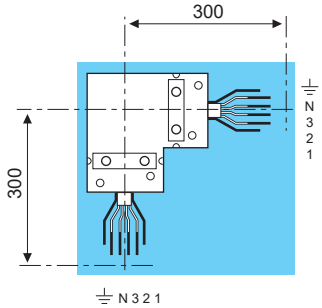

No. 1 flatwise elbow
Indoor reutral

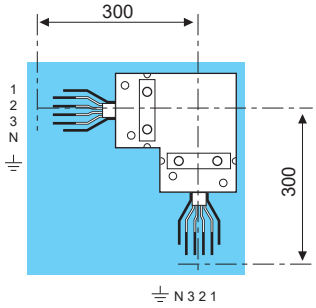

Edgewise elbow

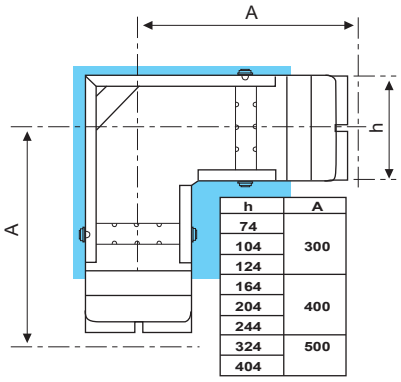

h	A
74	
104	300
124	
164	
204	400
244	
324	500
404	

End cover

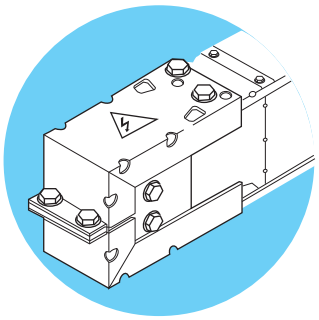

Complete junction unit

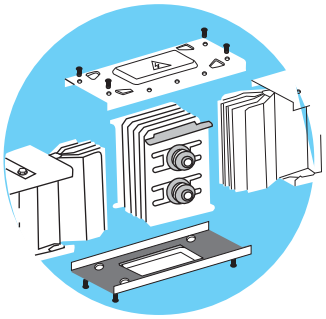

Horizontal fixing bracket

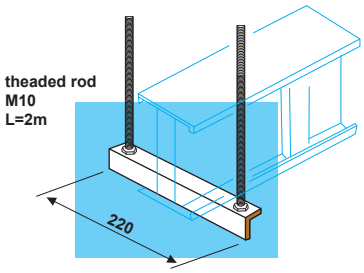

Vertical fixing bracket

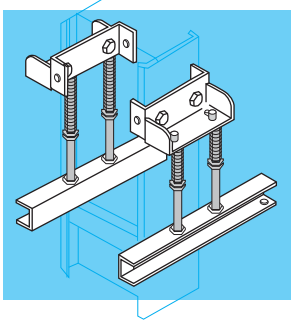

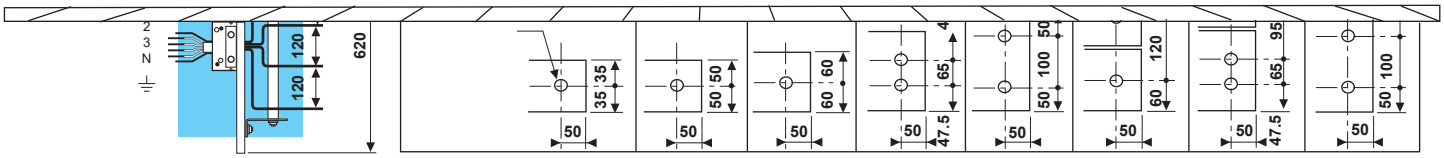

Complementary Units
Copper and Aluminium
Conductor Trunking

References
BTT - - 0 RAL 7032/35
BTT - - OB with extra earth conductor
BTT - - OF for IP 54 unit
BTT - - OC for unit fitted with double neutral

		h74	h104	h124	h164	h204	h244	h324	h404
Copper		1000A	1350A	1600A	2000A	2500A	3000A	4000A	5000A
3 P + N + PE									
Elbows	Edgewise	2906-0	2907-0	2901-0	2902-0	2903-0	2904-0	2905-0	2908-0
	No. 1 Flatwise	2916-0	2917-0	2911-0	2912-0	2913-0	2914-0	2915-0	2918-0
	No. 2 Flatwise	2926-0	2927-0	2921-0	2922-0	2923-0	2924-0	2925-0	2928-0
3 P + PE									
Elbows	Edgewise	1906-0	1907-0	1901-0	1902-0	1903-0	1904-0	1905-0	1908-0
	No. 1 Flatwise	1916-0	1917-0	1911-0	1912-0	1913-0	1904-0	1915-0	1918-0
	No. 2 Flatwise	1926-0	1927-0	1921-0	1922-0	1923-0	1924-0	1925-0	1928-0
3 P + N + PE									
Busbar expansion unit		2086-0	2087-0	2081-0	2082-0	2083-0	2084-0	2085-0	2088-0
3 P + PE									
Busbar expansion unit		1086-0	1087-0	1081-0	1082-0	1083-0	1084-0	1085-0	1088-0

		h74	h104	h124	h164	h204	h244	h324	h404
Aluminium		800A	1000A	1200A	1600A	2000A	2500A	3000A	4000A
3 P + N + PE									
Elbows	Edgewise	4906-0	4907-0	4905-0	4901-0	4902-0	4903-0	4904-0	4908-0
	No. 1 Flatwise	4916-0	4917-0	4915-0	4911-0	4912-0	4913-0	4914-0	4918-0
	No. 2 Flatwise	4926-0	4927-0	4925-0	4921-0	4922-0	4923-0	4924-0	4928-0
3 P + PE									
Elbows	Edgewise	3906-0	3907-0	3905-0	3901-0	3902-0	3903-0	3904-0	3908-0
	No. 1 Flatwise	3916-0	3917-0	3915-0	3911-0	3912-0	3913-0	3914-0	3918-0
	No. 2 Flatwise	3926-0	3927-0	3925-0	3921-0	3922-0	3923-0	3924-0	3928-0
3 P + N + PE									
Busbar expansion unit		4086-0	4087-0	4085-0	4081-0	4082-0	4083-0	4084-0	4088-0
3 P + PE									
Busbar expansion unit		3086-0	3087-0	3085-0	3081-0	3082-0	3083-0	3084-0	3088-0

Common Accessories
Conductor Trunking

	h74	h104	h124	h164	h204	h244	h324	h404
Copper	1000A	1350A	1600A	2000A	2500A	3000A	4000A	5000A
Aluminium	800A	1000A	1200A	1600A	2000A	2500A	3000A	4000A
End cover	6106-0	6107-0	6101-0	6102-0	6103-0	6104-0	6105-0	6108-0
3 P + N + PE complete junction unit	6546-0	6547-0	6541-0	6542-0	6543-0	6544-0	6545-0	6548-0
3 P + PE complete junction unit	6536-0	6537-0	6531-0	6532-0	6533-0	6534-0	6535-0	6538-0
Horizontal fixing bracket	Support (edgewise installation only)							6202-0
Vertical fixing bracket	Building slab support							6203-0

Tap-off Boxes from

25 to 1250A

Truning units incorporating windows can receive a range of IP 52 plug-in tap-off boxes (BTD type), rated from 25 to 400A, which are kept frictionally tight by spring-clip tap-off connectors.
Specific trunking units can receive a range of disconnectable tap-off boxes, rated from 400 to 1250A which are mechanically tightened by a prevailing torque bolt.
These tap-off boxes provide supply to power consumers or secondary lines whatever the neutral point connection (IT-TT-TNC or TNS).

Plug-in box (with power on)

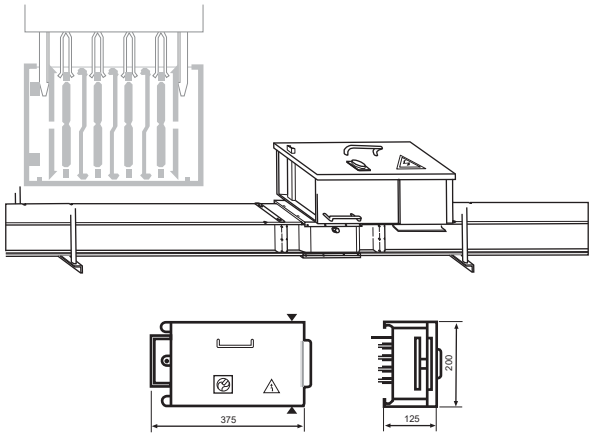

When a box is installed, protective conductor contact is made before phase conductor contacts.
When door is open, IP 2 finger protection is guaranteed.

Disconnectable box (with power off)

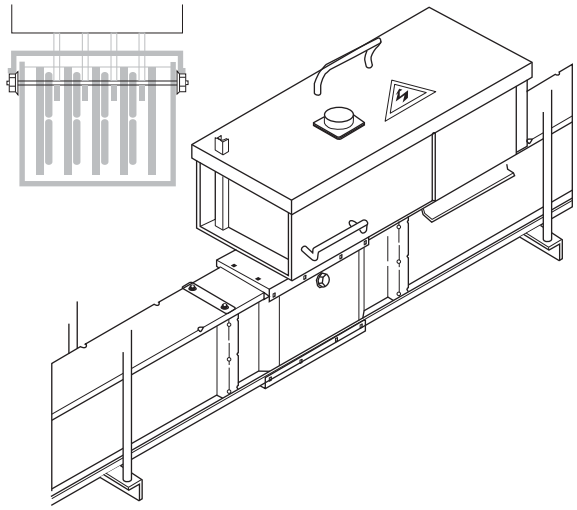

Handling of box is impossible under load.
When door is open, IP 2 finger protection is guaranteed

Trunking/ tap-off layout

BTA trunking layout				
IT	IT	TT	TNS	TNC
Neutral not tapped not distributed	Neutral tapped			
	Tap-off layout			
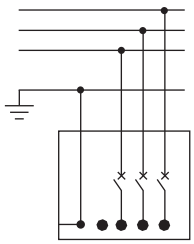	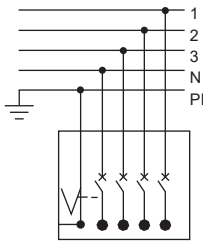	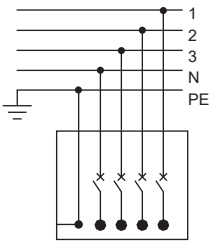	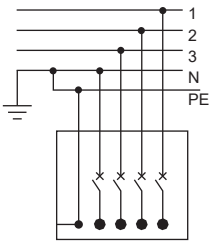	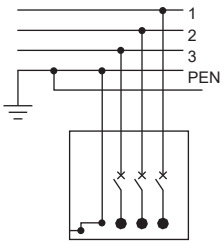

These boxes fit all BTA trunking sizes.
Cable outlets are through box sides (also through back of some boxes).

Plug-in tap-off boxes

from 25 to 400A

Plug-in tap-off boxes for switchgear

References BTB ....-0

	Box			Modular	3P+N+PE	3P+PEN
	Capacity	Size	Weight Kg	equipment		
Steel plate box for circuit breakers						
type Nirapod 2-AM100 (E/N/S) (not supplied)	100A	2	3	m 100A	5101-0	5105-0
type Nirapod 2-AM100 (E/N/S) (not supplied)	100A	3	13	m 100A	5102-0	5106-0
type Nirapod 2-AM100 (E/N/S) (not supplied)	100A	3	13	16 to 100A	5108-0	5109-0
type Nirapod 2-AM160 (E/N/S) (not supplied)	160A	4	30	40 to 160A	5168-0	5169-0
type Nirapod 2- AM250 (E/N/S) (not supplied)	250A	4	30	40 to 250A	5258-0	5259-0
type Nirapod 2-AM400 rotating control (S/M) (not supplied)	400A	4	30	400A	5408-0	5409-0

Disconnectable tap-off boxes for switchgear

References BTF ....-0

Steel plate disconnectable box		Box		Circuit breaker equipment	3P+N+PE	3P+PEN
	Capacity	Size	Weight Kg			
For rotating control circuit-breaker types Nirapod 2, AM400, AM630, A800 AM1000 & AM1250 (not supplied)	400A to 630A	A	25	AM400	0063-0	0064-0
				AM 500		
				AM 630		
	800A to 1250A	B	30	AM 800	0123-0	0124-0
				AM 1000		
				AM 1250		

Plug-in tap-off boxes

for switchgear

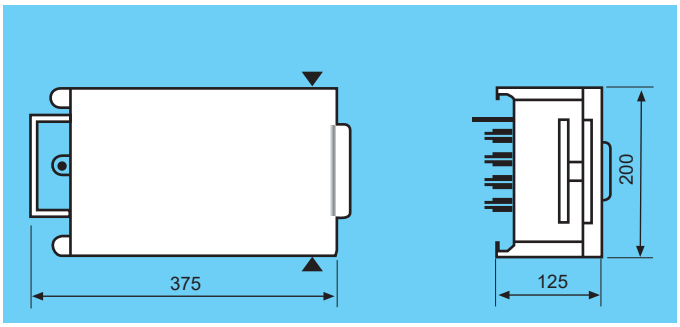

Size 2 tap-off box

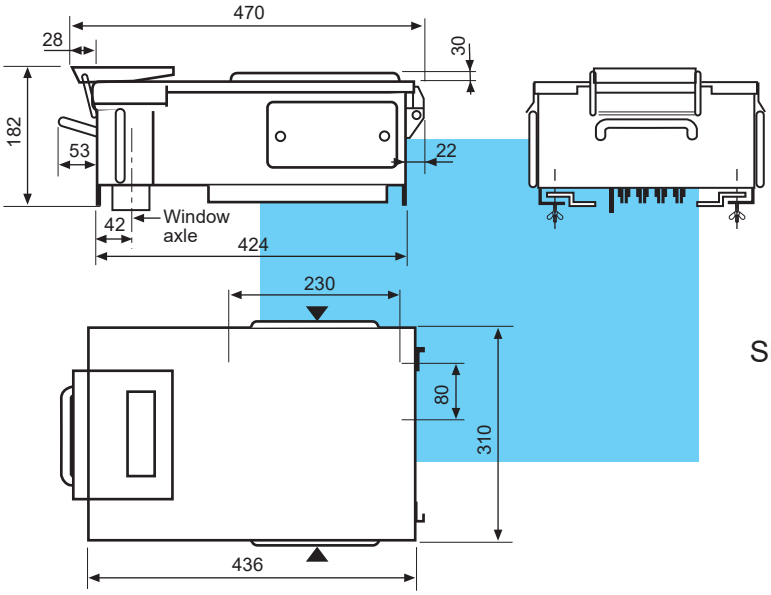

Size 3 tap-off box

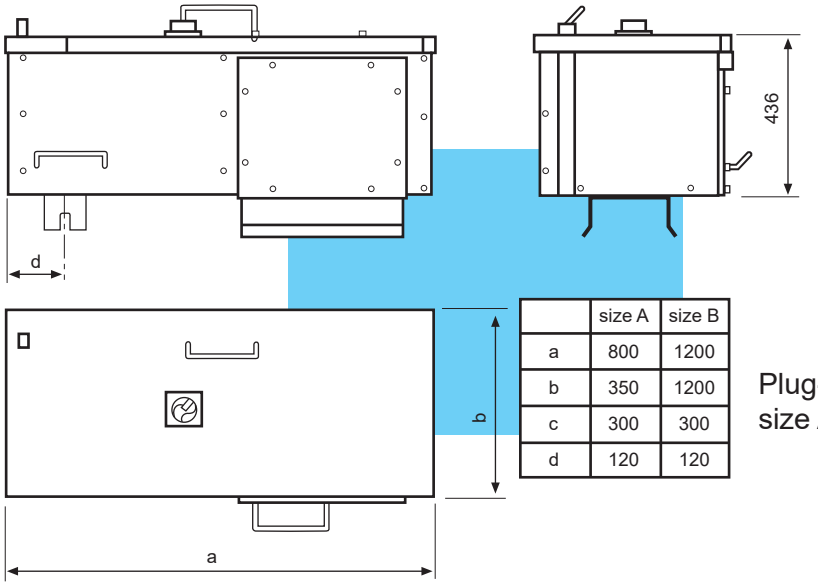

	size A	size B
a	800	1200
b	350	1200
c	300	300
d	120	120

Plug-in tap-off box
size A or B

High Power Transmission and Distribution

Installation guidelines for horizontal fixing.

Advice on use of structural expansion units.
A structural expansion unit is not required for the following installations:
- distribution lines less than 75 metres long
- transmission lines less than 50 metres long

If these lengths are to be exceeded, please consult your local agent.

Method for fixing trunking.
Trunking can be fixed:
- either, edgewise
- or, flatwise

Horizontal fixing brackets (hangers) comprise vertical M10, 1200 mm long, threaded steel rods and a horizontal painted angle.
Provide a hanger at least every 3 metres.

During installation, ensure that a junction between two units does not fall within the thickness of slab or wall.

Without tap-offs

Edgewise

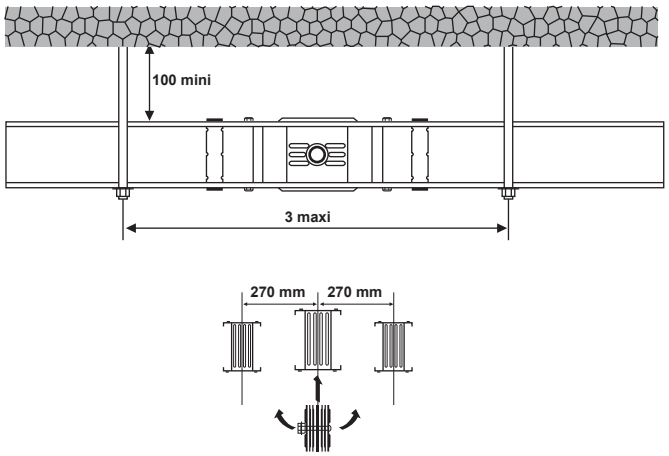

Flatwise

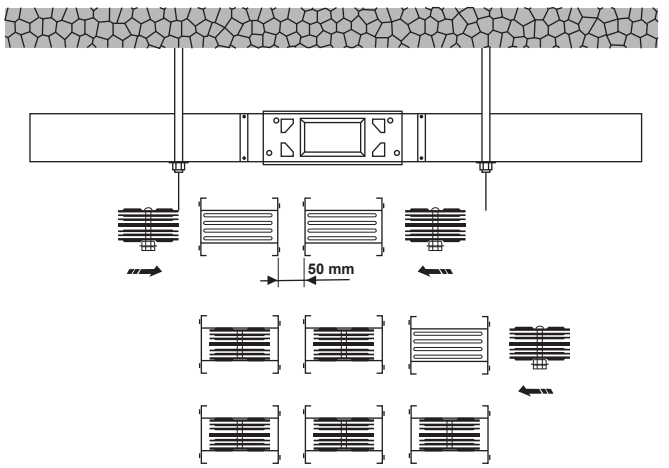

With tap-offs

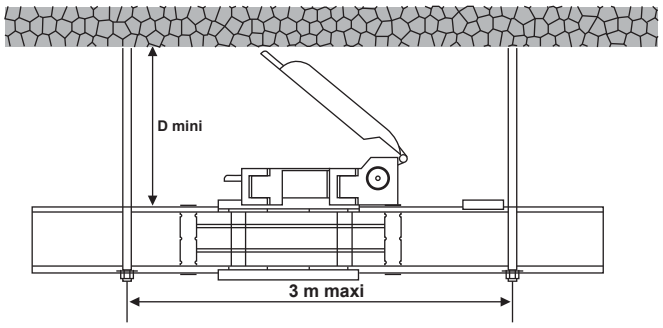

Sheet steel casing	No1	No2	No3	No4	A	B
Min. D	200	500	750	1000	1200	1500

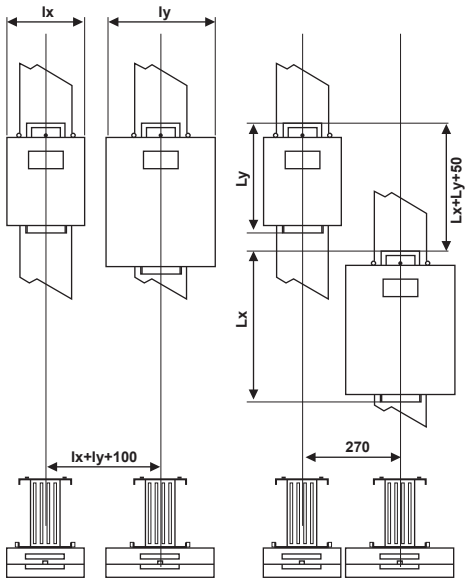

High Power Transmission and Distribution

Installation guidelines for vertical fixing.
800 to 5000

Advice on use of trunking expansion units.

• A trunking expansion unit is not required for the following installations:
- distribution lines less than 75 metres long - transmission lines less than 50 metres long

If these lengths are to be exceeded, please consult your local agent.

Method of fixing trunking

• For transmission or distribution, distrance D (trunking junction centreline - floor level) must be * 500 mm to allow fixing of the vertical trunking support.
On the last trunking unit, ensure that:
the correct end cover is provided, and that the unit is laterally braced by a wall flange to be fabricated during trunking installation.

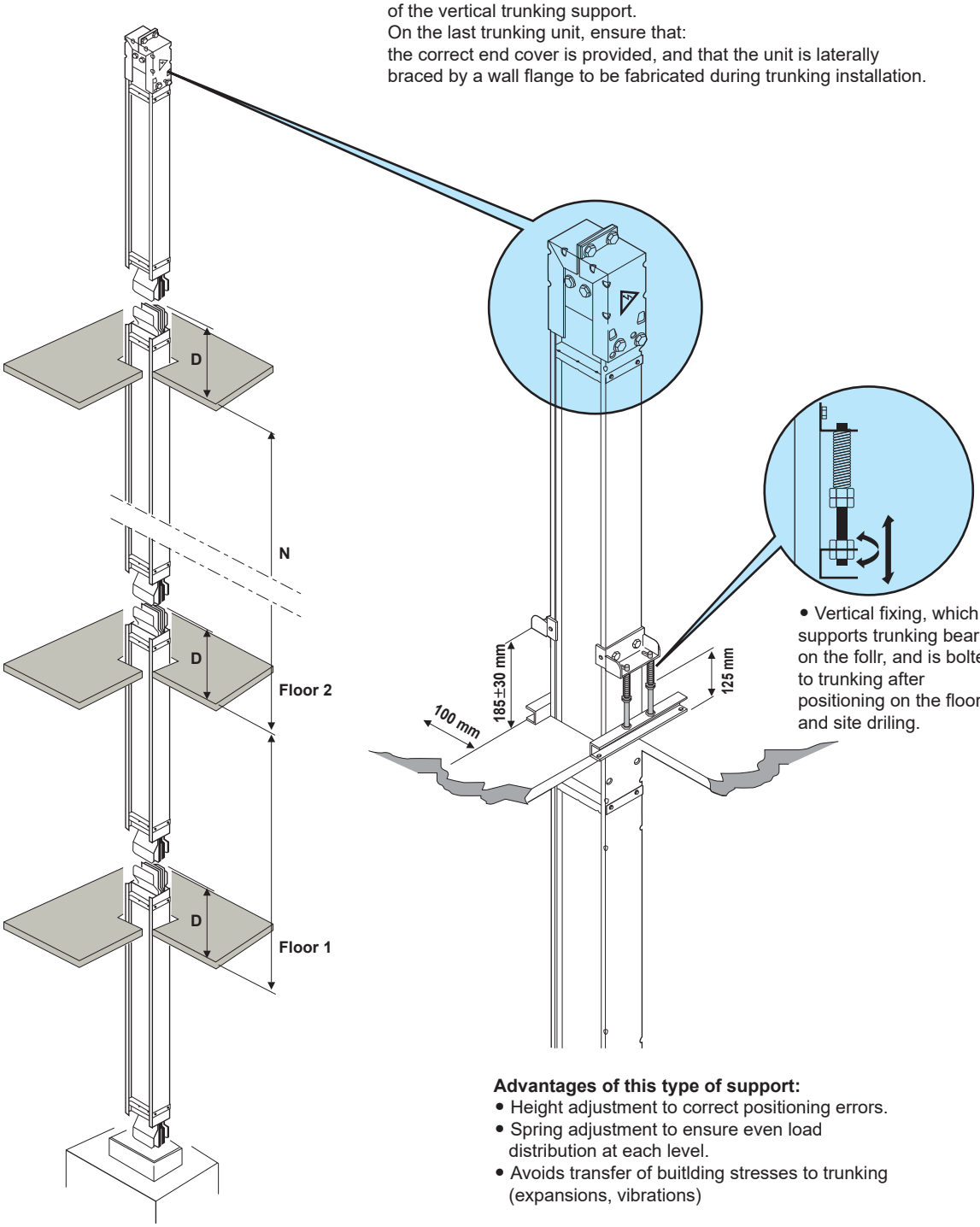

• Vertical fixing, which supports trunking bears on the follr, and is bolted to trunking after positioning on the floor and site driling.

Advantages of this type of support:

- Height adjustment to correct positioning errors.
- Spring adjustment to ensure even load distribution at each level.
- Avoids transfer of buitlding stresses to trunking (expansions, vibrations)

ADEX world-class factory to manufacture transformers, switchgears, busbar trunking, specialized lighting products & automation components.

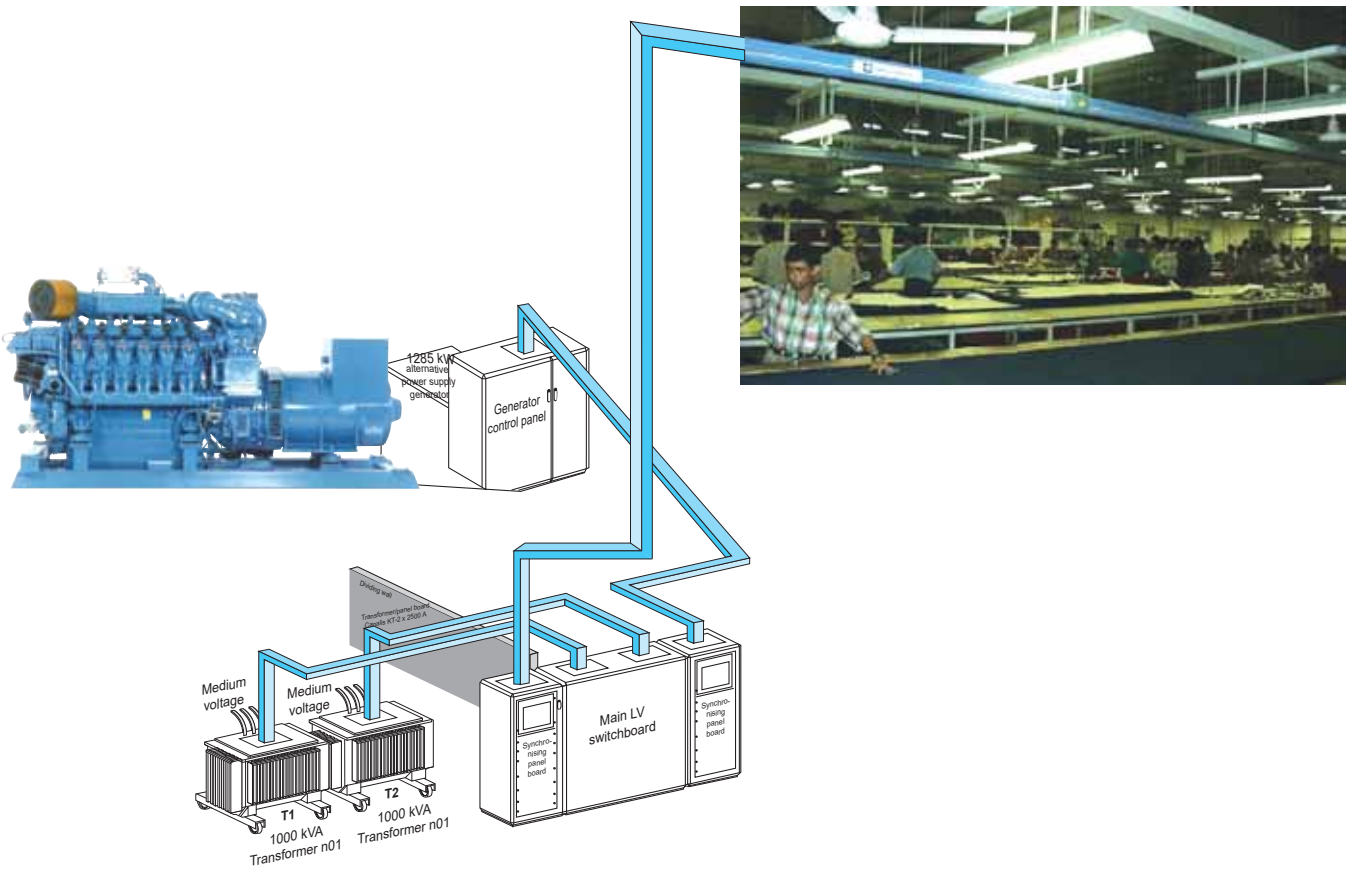

ADEX ENGINEERING LIMITED.

Corporate Office:
374 Tejgaon I/A (4th & 5th Floor)
Dhaka-1208, Bangladesh.
Tel: +88-02 - 55029737, 55029738
E-mail: info@adexbd.com

Chattogram Office:
bti Kanchan, Flat - A2, House - 25
Road - 2, O.R Nizam Road R/A
GEC Circle, Chattogram – 4000
Phone: +88 01713 436281
E-mail: adex_ctg@adexbd.com

Sylhet Office:
Natun Bridge, Shayestagonj
Station Road, Hobigonj
Mobile: +88 01708 499990
E-mail: adex_sylhet@adexbd.com

Khulna Office:
Mirza Cottage
119 Sonadanga Thana Road
Mojid Saroni, Sonadanga, Khulna
Mobile: +88 01709 632890
E-mail: adex_khulna@adexbd.com

Bogura Office:
Rimu & Tanvir Monjil (1st Floor)
House - 2, Road - 1, Masjid Line
Upashahor Bazar, Bogura
Mobile: +88 01729 212188
E-mail: adex_bogra@adexbd.com

Cumilla Office:
32/ka Tri-Ratno (3rd Floor)
Islampur, Fousdari Chowmohoni
Judge Court Road, Cumilla
Mobile: +88 01708 499990
E-mail: adex_comilla@adexbd.com

Factory:
Unit-1: Holding No. 3060/3798
West Dogri, Bhawal Mirzapur
Unit-2: J.L No. 6, Mouja: Dogri
Union: Mirzapur, Gazipur, Bangladesh
E-mail: ael_works@adexbd.com

www.adexbd.com